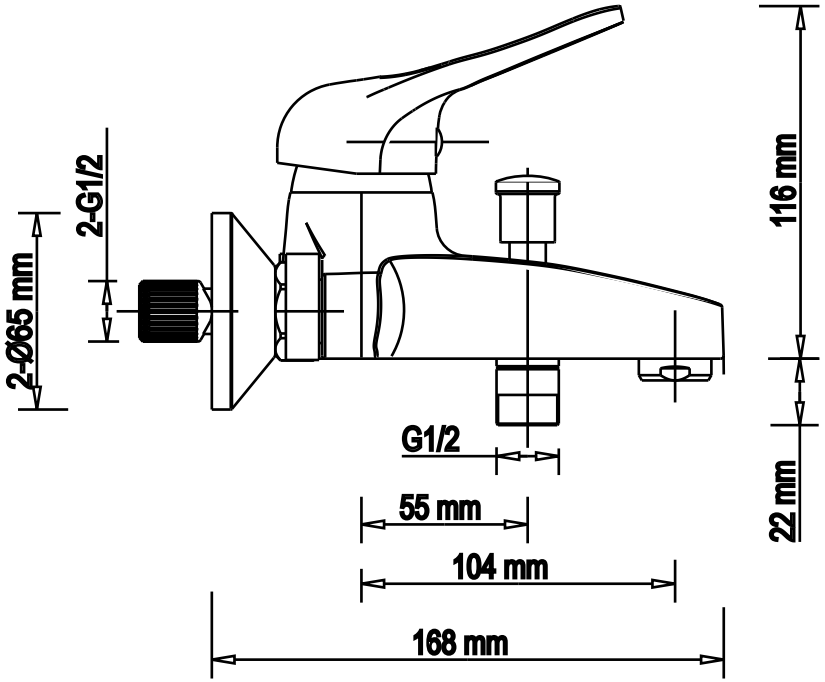
2-G1/2
2-Ø65 mm
G1/2
55 mm
104 mm
168 mm
116 mm
22 mm

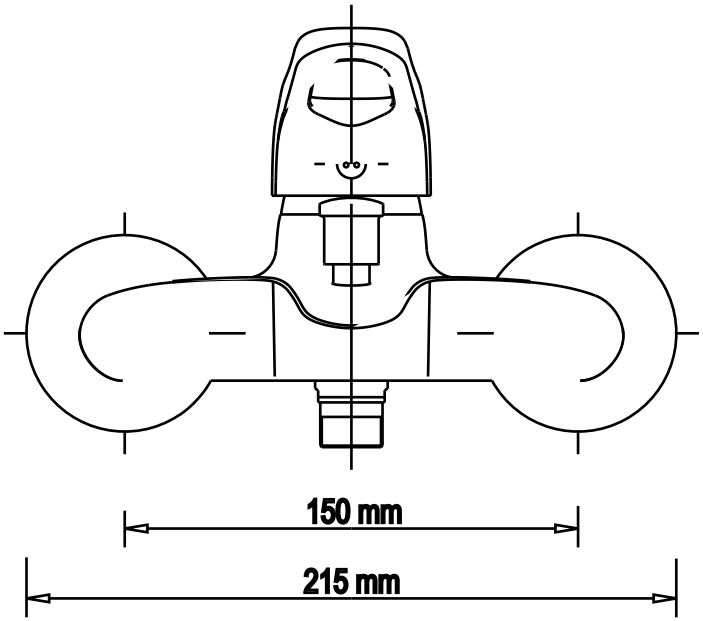
150 mm
215 mm